GUSTOS

Cantilever storage rack

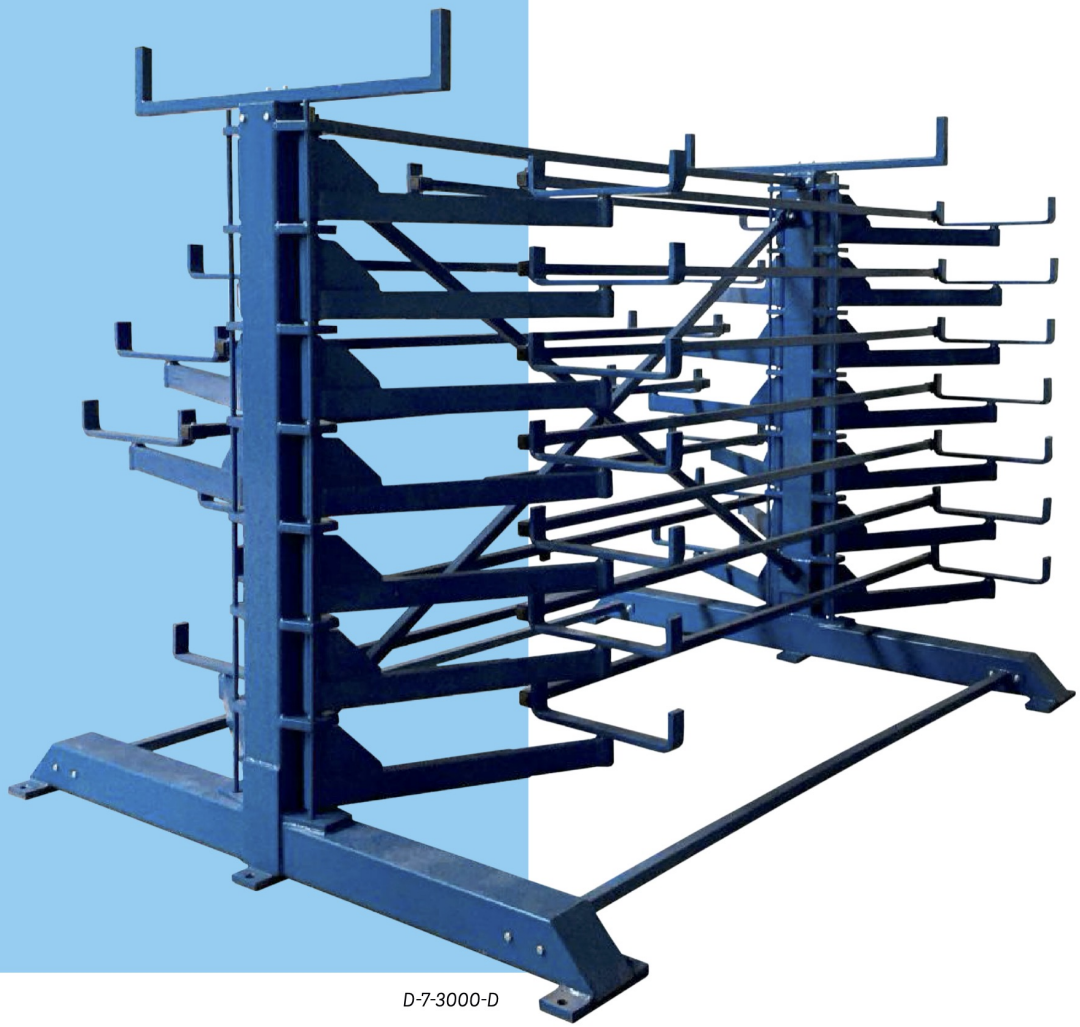

D-7-3000-D

CONNCEPT machinery

GUSTOS

Cantilever storage rack

Efficient storage and handling of long materials such as profiles, pipes, tubes, solid bars and more. Each individual layer can be separately extended and provides easy loading and unloading from the top, for example by using an overhead crane.
Using a forklift is no longer necessary, creating a safer and more ergonomic working environment. Moreover, the storage system saves a great deal of space, which leads to a significant reduction in storage costs.

DUMETA® delivers 36 models with capacities up to 3.000kg per layer.
Various designs that are custom made according to customer's requirements are also available.

Features

- Individual swing arms provide easy access to each extended layer
- 36 different standard models
- Suitable for material of 3 m or 6 m in length, it is even possible to store materials up to 24 m
- Storage capacity per layer 750 kg, 1.000 kg, 2.000 kg or 3.000 kg
- Large storage capacity per m^2 of floor area
- Safe and ergonomic
- Perfect overview of stored material

D-5-3000-D

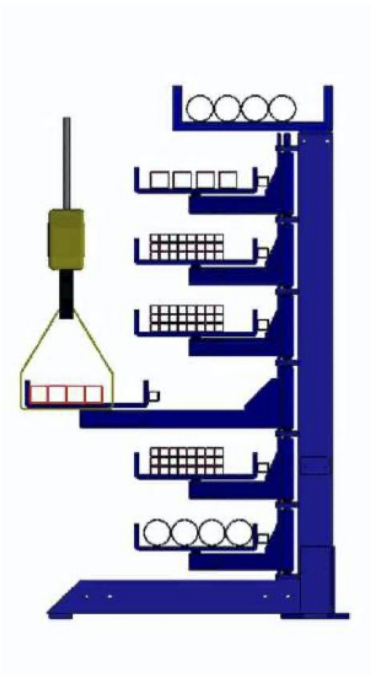

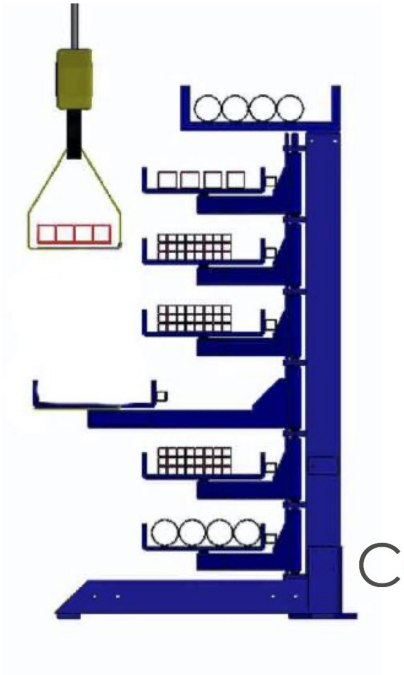

CONNCEPT machinery

GUSTOS

Cantilever storage rack

Two columns

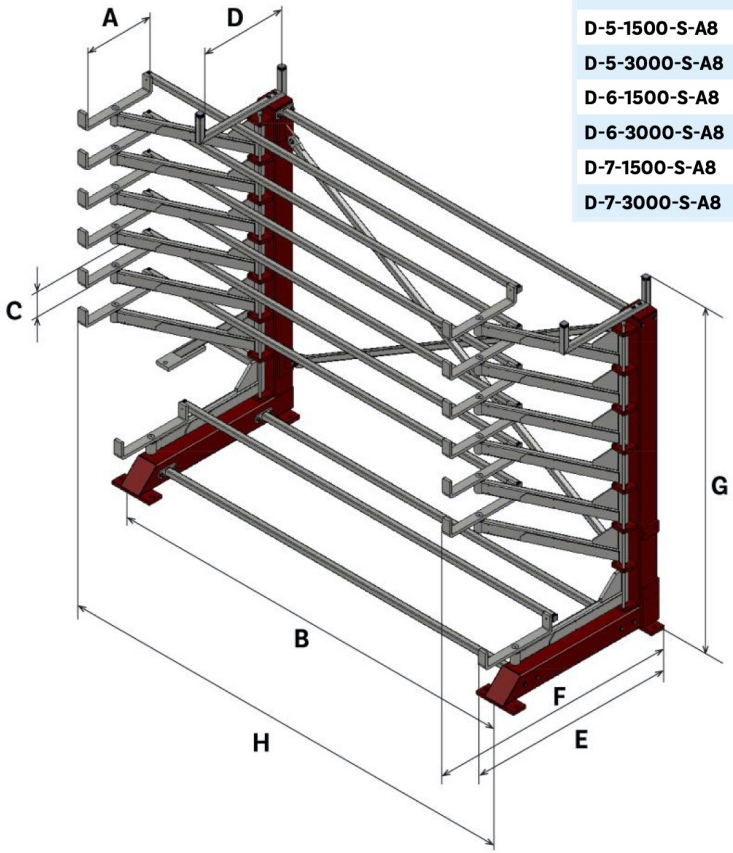

Single (including levelling feet)

Model	Levels	CtC (mm)	Max. load rack (kg)	A	B	C	D	E	F	G	H	Recommended material length (mm)
	Depth 500 mm (A) / Max. load per layer 2.000 kg											
D-5-1500-S	5	1.500	10.000	500	1.500	275	620	1.421	942	2.390	2.250	3.000
D-5-3000-S	5	3.000	10.000	500	3.000	275	620	1.421	942	2.390	3.750	6.000
D-6-1500-S	6	1.500	12.000	500	1.500	210	620	1.421	942	2.390	2.250	3.000
D-6-3000-S	6	3.000	12.000	500	3.000	210	620	1.421	942	2.390	3.750	6.000
D-7-1500-S	7	1.500	14.000	500	1.500	164	620	1.421	942	2.390	2.250	3.000
D-7-3000-S	7	3.000	14.000	500	3.000	164	620	1.421	942	2.390	3.750	6.000
	Depth 800 mm (A) / Max. load per layer 750 kg											
D-5-1500-S-A8	5	1.500	3.750	800	1.500	275	620	2.045	1.211	2.390	2.725	3.000
D-5-3000-S-A8	5	3.000	3.750	800	3.000	275	620	2.045	1.211	2.390	4.225	6.000
D-6-1500-S-A8	6	1.500	4.500	800	1.500	210	620	2.045	1.211	2.390	2.725	3.000
D-6-3000-S-A8	6	3.000	4.500	800	3.000	210	620	2.045	1.211	2.390	4.225	6.000
D-7-1500-S-A8	7	1.500	5.250	800	1.500	164	620	2.045	1.211	2.390	2.725	3.000
D-7-3000-S-A8	7	3.000	5.250	800	3.000	164	620	2.045	1.211	2.390	4.225	6.000

All information is subject to printing-, typing errors and modifications.

CONNCEPT machinery

GUSTOS

Cantilever storage rack

Two columns

Double

Model	Levels	CtC (mm)	Max. load rack (kg)	A	B	C	D	E	F	G	H	Recommended material length (mm)
	Depth 500 mm (A) / Max. load per layer 2.000 kg											
D-5-1500-D	5	1.500	20.000	500	1.500	275	1.170	2.542	1.582	2.390	2.250	3.000
D-5-3000-D	5	3.000	20.000	500	3.000	275	1.170	2.542	1.582	2.390	3.750	6.000
D-6-1500-D	6	1.500	24.000	500	1.500	210	1.170	2.542	1.582	2.390	2.250	3.000
D-6-3000-D	6	3.000	24.000	500	3.000	210	1.170	2.542	1.582	2.390	3.750	6.000
D-7-1500-D	7	1.500	28.000	500	1.500	164	1.170	2.542	1.582	2.390	2.250	3.000
D-7-3000-D	7	3.000	28.000	500	3.000	164	1.170	2.542	1.582	2.390	3.750	6.000
	Depth 800 mm (A) / Max. load per layer 750 kg											
D-5-1500-D-A8	5	1.500	7.500	800	1.500	275	1.170	3.790	2.122	2.390	2.725	3.000
D-5-3000-D-A8	5	3.000	7.500	800	3.000	275	1.170	3.790	2.122	2.390	4.225	6.000
D-6-1500-D-A8	6	1.500	9.000	800	1.500	210	1.170	3.790	2.122	2.390	2.725	3.000
D-6-3000-D-A8	6	3.000	9.000	800	3.000	210	1.170	3.790	2.122	2.390	4.225	6.000
D-7-1500-D-A8	7	1.500	10.500	800	1.500	164	1.170	3.790	2.122	2.390	2.725	3.000
D-7-3000-D-A8	7	3.000	10.500	800	3.000	164	1.170	3.790	2.122	2.390	4.225	6.000

All information is subject to printing-, typing errors and modifications.

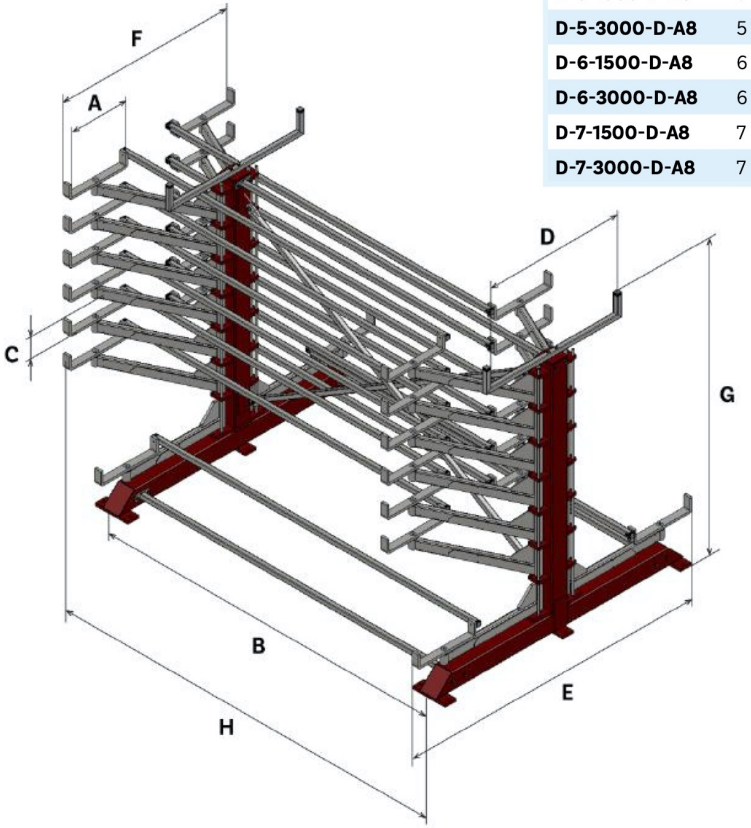

CONNCEPT machinery

GUSTOS

Cantilever storage rack

Three columns

Single (including levelling feet)

Model	Levels	CtC (mm)	Max. load rack (kg)	A	B	C	D	E	F	G	H	Recommended material length (mm)
	Depth 500 mm (A) / Max. load per layer 3.000 kg											
D-5-S-2-2000	5	2 x 2.000	15.000	500	2.000	275	620	1.421	942	2.390	4.774	6.000
D-6-S-2-2000	6	2 x 2.000	18.000	500	2.000	210	620	1.421	942	2.390	4.774	6.000
D-7-S-2-2000	7	2 x 2.000	21.000	500	2.000	164	620	1.421	942	2.390	4.774	6.000
	Depth 800 mm (A) / Max. load per layer 1.100 kg											
D-5-S-2-2000-A8	5	2 x 2.000	5.500	800	2.000	275	620	2.045	1.211	2.390	5.285	6.000
D-6-S-2-2000-A8	6	2 x 2.000	6.600	800	2.000	210	620	2.045	1.211	2.390	5.285	6.000
D-7-S-2-2000-A8	7	2 x 2.000	7.700	800	2.000	164	620	2.045	1.211	2.390	5.285	6.000

All information is subject to printing-, typing errors and modifications.

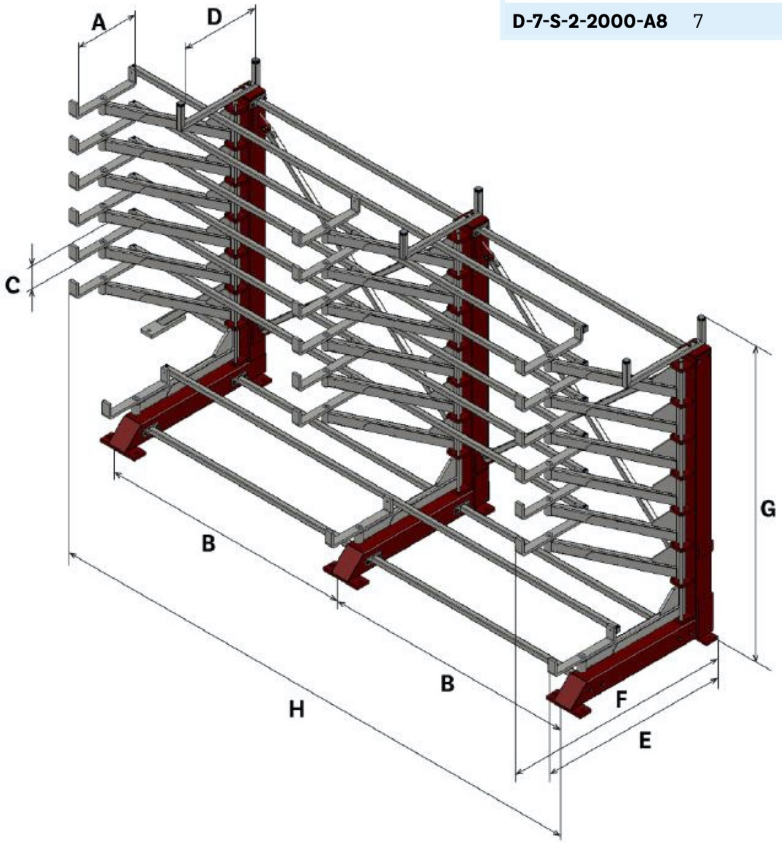

CONNCEPT machinery

GUSTOS

Cantilever storage rack

Three columns

Double

Model	Levels	CtC (mm)	Max. load rack (kg)	A	B	C	D	E	F	G	H	Recommended material length (mm)
	Depth 500 mm (A) / Max. load per layer 3.000 kg											
D-5-D-2-2000	5	2 x 2.000	30.000	500	2.000	275	1.170	2.542	1.582	2.390	4.774	6.000
D-6-D-2-2000	6	2 x 2.000	36.000	500	2.000	210	1.170	2.542	1.582	2.390	4.774	6.000
D-7-D-2-2000	7	2 x 2.000	42.000	500	2.000	164	1.170	2.542	1.582	2.390	4.774	6.000
	Depth 800 mm (A) / Max. load per layer 1.100 kg											
D-5-D-2-2000-A8	5	2 x 2.000	11.000	800	2.000	275	1.170	3.790	2.122	2.390	5.285	6.000
D-6-D-2-2000-A8	6	2 x 2.000	13.200	800	2.000	210	1.170	3.790	2.122	2.390	5.285	6.000
D-7-D-2-2000-A8	7	2 x 2.000	15.400	800	2.000	164	1.170	3.790	2.122	2.390	5.285	6.000

All information is subject to printing-, typing errors and modifications.

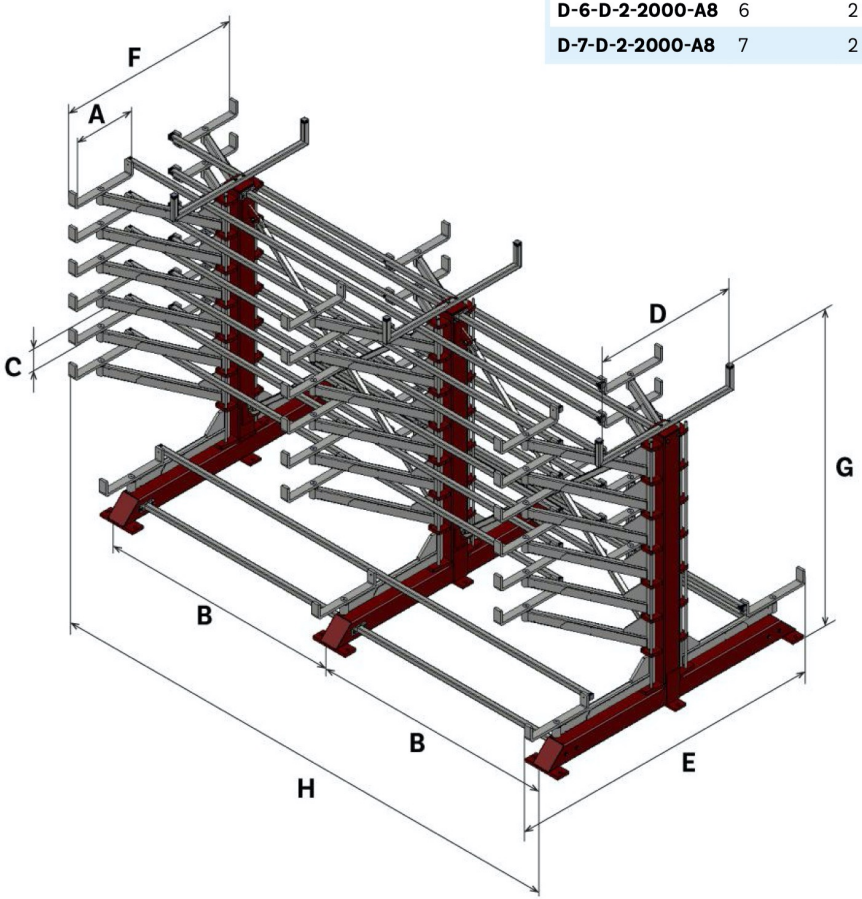

CONNCEPT machinery

GUSTOS

Cantilever storage rack

Optional

- Storage trays for storage of short pieces or flexible materials
- Several kind of dividers
- Levelling feet for floor irregularities
- Telescopic arm for a lighter movement of heavy layers (max. loading)

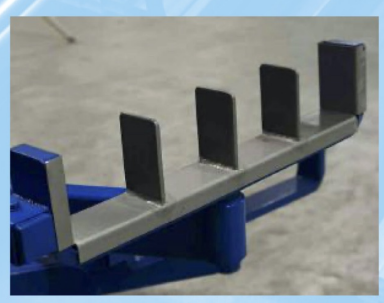

CONNCEPT machinery